RIVERS LOCKING SYSTEMS (AUSTRALIA) PTY LTD
25 Circuit Court, Hendon SA 5014
Phone: 1300 857 276
Email: sales@riverslocking.com.au

RIVERS 420 SEMAPHORE LOCK – OPEN IN DOOR

1. Remove cover from Lock Body.
2. Position Lock onto door so that bottom of Lock is 5-10mm up from the bottom of the door & such that the edge of the Lock Body is as close as is practical to the opening edge of the active door leaf. (Fig. 1 & 2)
3. Fix Lock to door using only three self-tapping screws provided.
4. Mark four Cylinder Shield holes & Cylinder centre using the Lock Backing Plate as a template. (Fig. 3)
5. Remove Lock Body from door & drill four 10mm diameter holes through door, then counter bore each 15mm diameter x 25mm deep from the outside. (Fig. 4)
6. Drill Lock Cylinder hole 32mm diameter. (Fig. 5)
7. Mount Lock Body to door using self-tapping screws provided.
8. Fit Cylinder Shield Assembly to door using screws provided. Fix through lock body. (Fig. 7)
9. With door closed, activate the Locking Bars so that the lower bar touches on the flooring. Mark position of locking bar on floor. Use masonry drill to drill out floor to accept lower locking bar.
10. With the Locking Bars extended (i.e. locked position) & the key removed from the Cylinder, ensure that the Cam (that accepts the Cylinder Tail) is oriented so the two marks are lined up (one on the Cam, the other on the cover plate.) The door will need to be shut to do this. This is critical for the Lock to function properly.
11. With door closed, activate the Locking Bars so that the top bar extends over the frame at the head. Position the keeper supplied over the Locking Bar and against the frame, ensuring there is equal clearance around the bar. Fix in position using supplied screws. (Fig. 8)
12. With the door leaves closed & Lock in the locked position, the third & fourth Locking Arms should be lying over the secondary door leaf. Position the Receiving Cups provided over these Locking Bars. Ensure that the arms swing freely in & out of the Cups. Fix through secondary door leaf with 2 screws & 2 cup head bolts per receiving cup. (Fig. 11)
13. Fit outside Handle & Spindle to door using screws provided.
14. At this point check the operation of the Cam Locking Bar. Ensure when the outside Lever Handle is moved upwards to the horizontal position, the Cam Locking Bar falls freely into the cut out in the Inner Cam Plate. (Fig. 6)
15. Ensure correct Lock operation. Inside Handle must disengage Locking Bars at all times (for escape), while the outside Handle should not operate unless the Cylinder has been unlocked with the key.
16. Replace Lock Body Cover.
17. Install Inside Lever Handle.
18. Ensure Lock operates smoothly & without resistance. Excessive force should not be required to activate Lock. Inside Lever Handle must operate in a downward motion & allow escape at all times.

PLEASE NOTE: RIVERS RESERVES THE RIGHT TO CHANGE SPECIFICATIONS WITHOUT NOTICE

RIVERS LOCKS SHOULD ONLY BE MOUNTED ONTO SOLID CORE DOORS

410/420 SEMAPHORE LOCK-OPEN IN DOOR

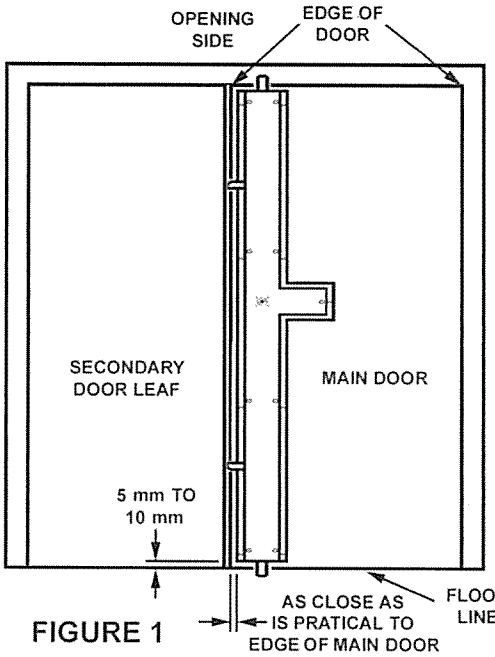

FIGURE 1

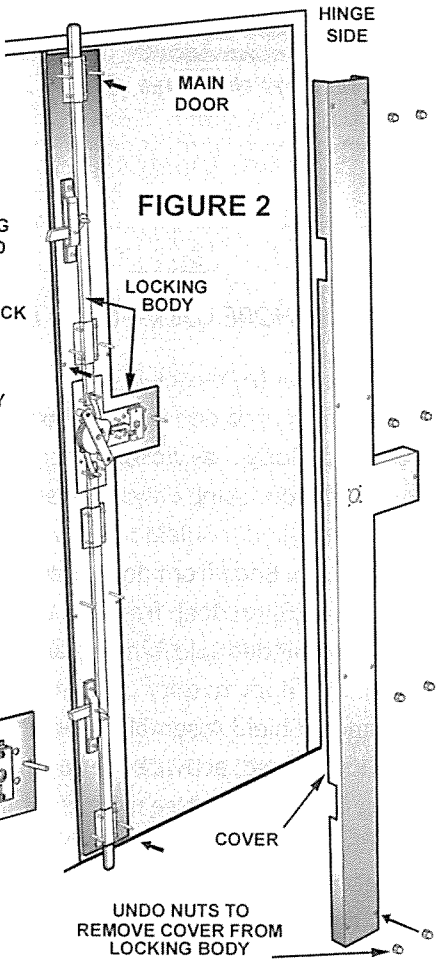

FIGURE 2

LOCKING BODY MOUNTS TO DOOR USING SELF-TAPPING SCREWS

WHEN CYLINDER MOUNTING HOLES ARE TO BE MARKED ONTO DOOR, USE ONLY 3 SELF-TAPPING SCREWS, TEMPORARILY, TO MOUNT LOCK TO DOOR OR, FOR LOCKS WITHOUT CYLINDERS, USE ALL SELF TAPPING SCREWS TO PERMANENTLY MOUNT LOCK TO DOOR

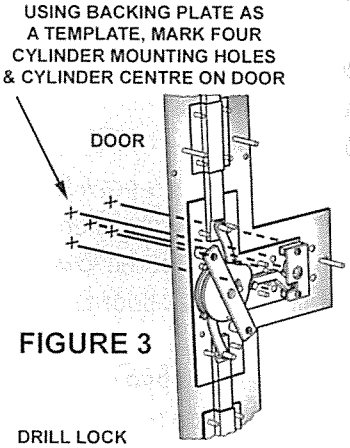

FIGURE 3

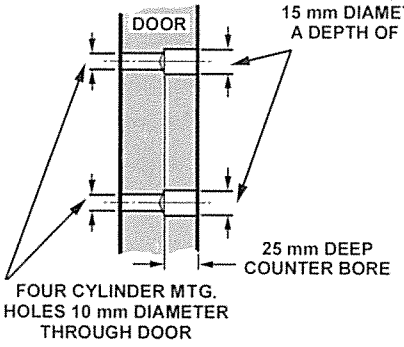

FIGURE 4
TYPICAL SECTION FOR FOUR CYLINDER MOUNTING HOLES

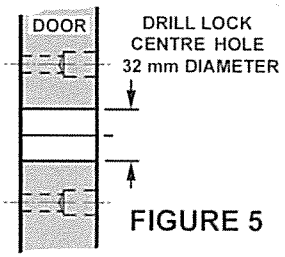

FIGURE 5

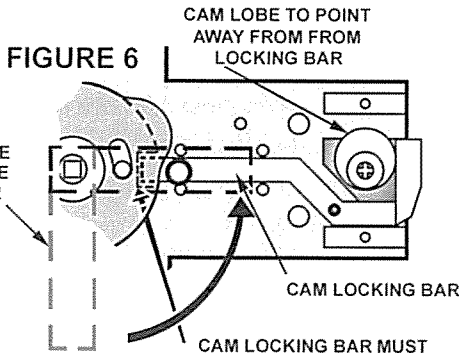

FIGURE 6

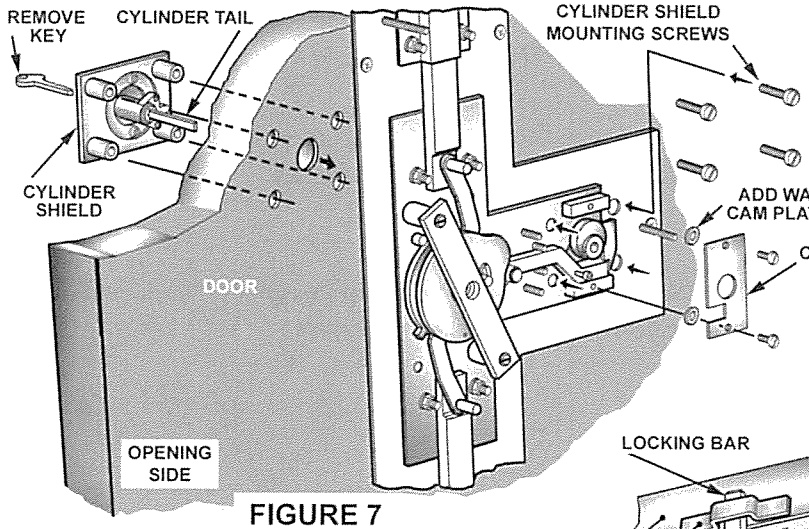

FIGURE 7

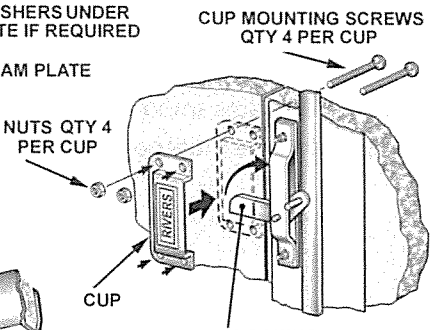

FIGURE 9

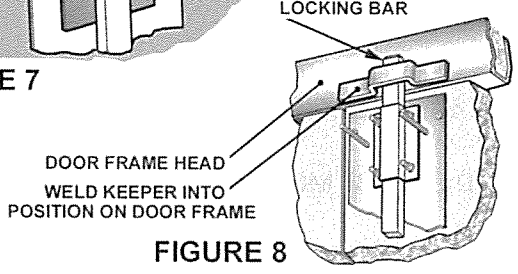

FIGURE 8