RIVERS LOCKING SYSTEMS (AUSTRALIA) PTY LTD
25 Circuit Court, Hendon SA 5014
Phone: 1300 857 276
Email: sales@riverslocking.com.au

RIVERS 410 SEMAPHORE LOCK – OPEN OUT DOOR

1. Position Lock onto door so that bottom of Lock is 5-10mm up from the bottom of the door & such that the edge of the Lock Body is as close as is practical to the opening edge of the active door leaf.
2. Fix Lock to door using all self-tapping screws provided.
3. Install Internal Lever Handle.
4. With door closed, activate the Locking Bars so that they are touching at the head of the door frame & on the flooring. Mark position of locking bars on frame & floor.
5. Drill a 12mm diameter hole in frame at either side of top Locking Bar position. Use a small cutting wheel to splice between the two holes. This will create a slot in the frame to accept Locking Bar. If frame is concrete filled, drill out masonry to a depth so that Locking Bars will not 'bottom out' when fully extended. Use masonry drill to drill out floor to accept lower Locking Bar. (Fig. 8, 9 & 10)
6. Clean edges of slots & ensure smooth action of Lock when locking/unlocking.
7. Install striker plates using self-tapping screws in frame and plugs & screws in floor.
8. With the door leaves closed & Lock in the locked position, the third & fourth Locking Arms should be lying over the secondary door leaf. Position the Receiving Cups provided over these Locking Bars. Ensure that the arms swing freely in & out of the Cups. Fix through secondary door leaf with 2 screws & 2 cup head bolts per receiving cup. (Fig. 11)
9. Ensure correct Lock operation. Handle must disengage Locking Bars at all times (for escape).
10. Ensure Lock operates smoothly & without resistance. Excessive force should not be required to activate Lock. Lever Handle must operate in a downward motion & allow escape at all times.

PLEASE NOTE: RIVERS RESERVES THE RIGHT TO CHANGE SPECIFICATIONS WITHOUT NOTICE

RIVERS LOCKS SHOULD ONLY BE MOUNTED ONTO SOLID CORE DOORS

410/420 SEMAPHORE LOCK-OPEN OUT DOOR

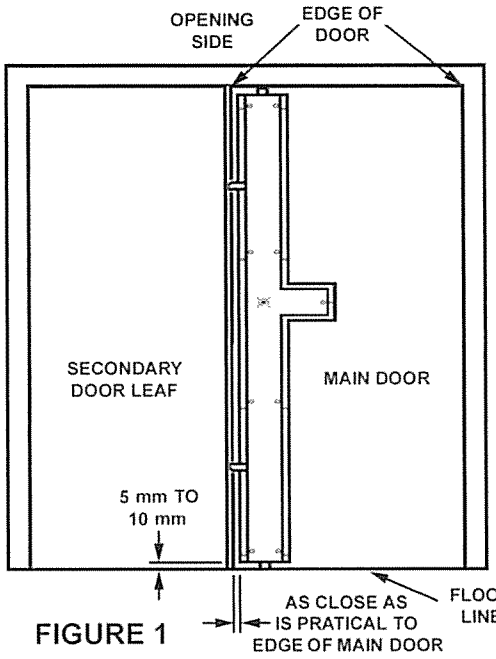

FIGURE 1

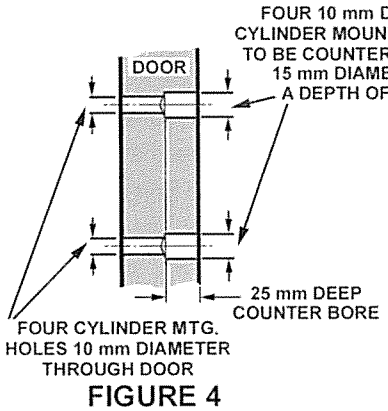

FIGURE 4
TYPICAL SECTION FOR FOUR CYLINDER MOUNTING HOLES

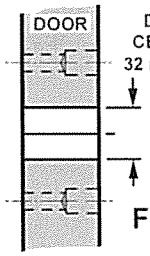

FIGURE 5

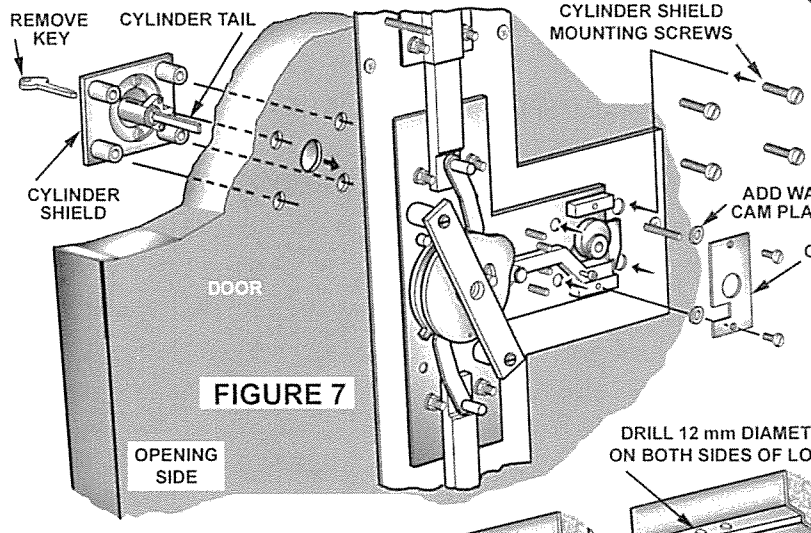

FIGURE 7

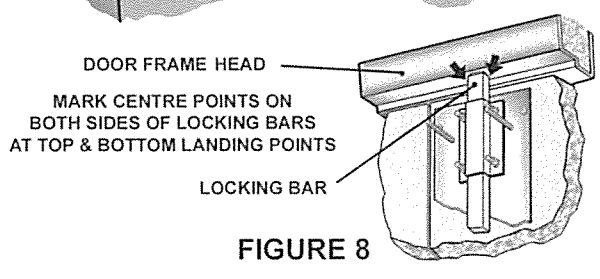

FIGURE 8

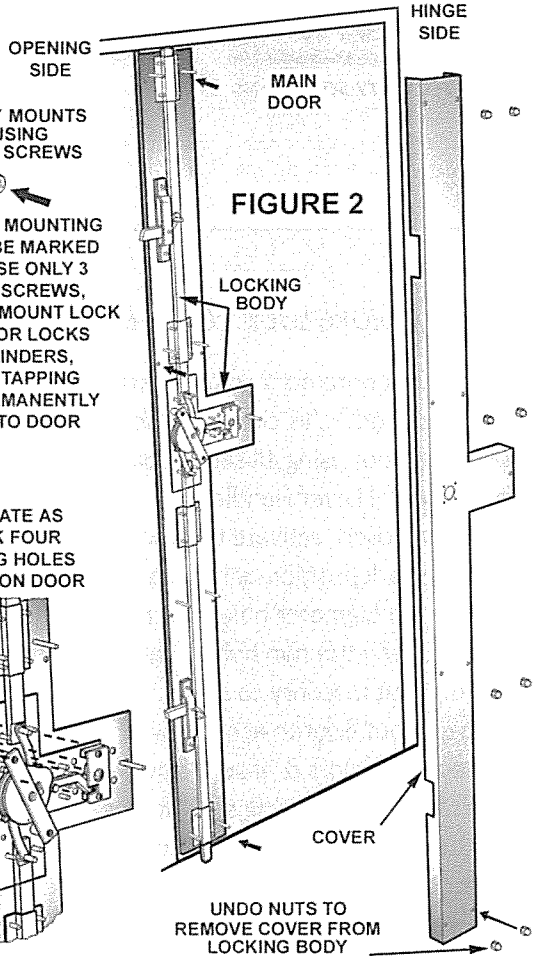

FIGURE 2

LOCKING BODY MOUNTS TO DOOR USING SELF-TAPPING SCREWS

WHEN CYLINDER MOUNTING HOLES ARE TO BE MARKED ONTO DOOR, USE ONLY 3 SELF-TAPPING SCREWS, TEMPORARILY, TO MOUNT LOCK TO DOOR OR, FOR LOCKS WITHOUT CYLINDERS, USE ALL SELF TAPPING SCREWS TO PERMANENTLY MOUNT LOCK TO DOOR

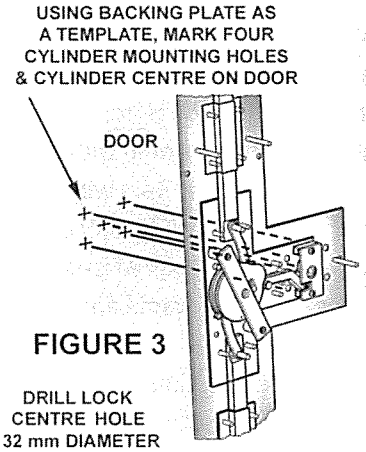

FIGURE 3

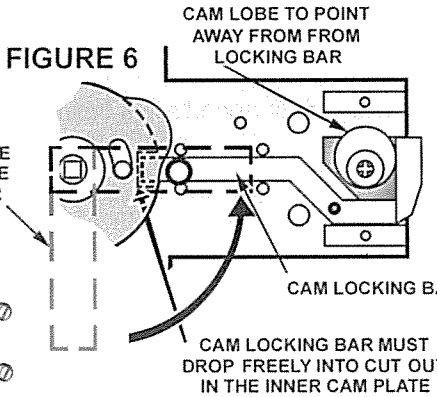

FIGURE 6

FIGURE 9

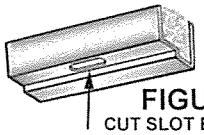

FIGURE 10
CUT SLOT BY REMOVING MATERIAL BETWWEEN 12 mm DIAMETER HOLES

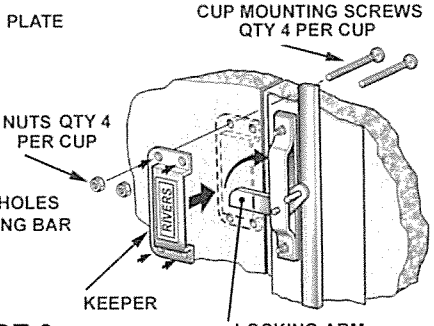

MOUNT KEEPER WITH FOUR SCREWS & NUTS THROUGH SECONDARY DOOR LEAF

FIGURE 11