RIVERS LOCKING SYSTEMS (AUSTRALIA) PTY LTD
25 Circuit Court, Hendon SA 5014
Phone: 1300 857 276
Email: sales@riverslocking.com.au

RIVERS 410 SEMAPHORE LOCK – OPEN IN DOOR

1. Position Lock onto door so that bottom of Lock is 5-10mm up from the bottom of the door & such that the edge of the Lock Body is as close as is practical to the opening edge of the active door leaf. (Fig. 1 & 2)
2. Fix Lock to door using all self-tapping screws provided.
3. Install Internal Lever Handle.
4. With door closed, activate the Locking Bars so that the lower bar touches on the flooring. Mark position of locking bar on floor. Use masonry drill to drill out floor to accept lower locking bar.
5. With door closed, activate the Locking Bars so that the top bar extends over the frame at the head. Position the keeper supplied over the Locking Bar and against the frame, ensuring there is equal clearance around the bar. Fix in position using supplied screws. (Fig. 8)
6. With the door leaves closed & Lock in the locked position, the third & fourth Locking Arms should be lying over the secondary door leaf. Position the Receiving Cups provided over these Locking Bars. Ensure that the arms swing freely in & out of the Cups. Fix through secondary door leaf with 2 screws & 2 cup head bolts per receiving cup. (Fig. 11)
7. Ensure correct Lock operation. Inside Handle must disengage Locking Bars at all times (for escape).
8. Ensure Lock operates smoothly & without resistance. Excessive force should not be required to activate Lock. Inside Lever Handle must operate in a downward motion & allow escape at all times.

PLEASE NOTE: RIVERS RESERVES THE RIGHT TO CHANGE SPECIFICATIONS WITHOUT NOTICE

RIVERS LOCKS SHOULD ONLY BE MOUNTED ONTO SOLID CORE DOORS

410/420 SEMAPHORE LOCK-OPEN IN DOOR

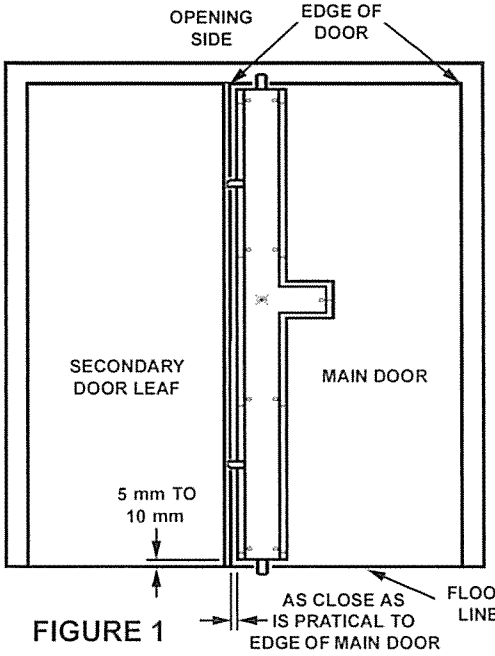

FIGURE 1

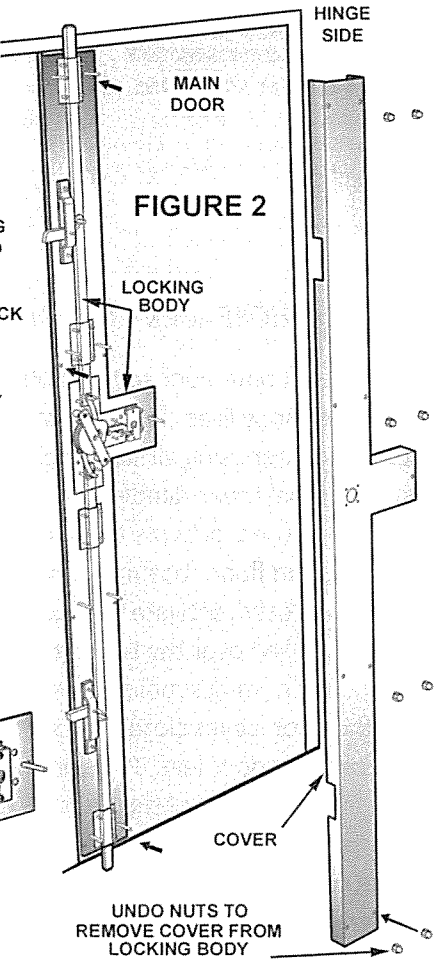

FIGURE 2

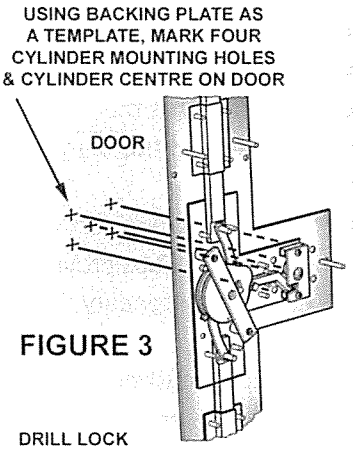

FIGURE 3

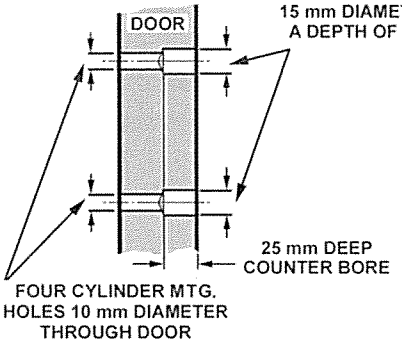

FIGURE 4
TYPICAL SECTION FOR FOUR CYLINDER MOUNTING HOLES

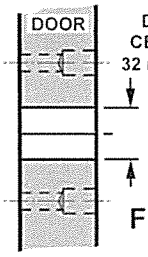

FIGURE 5

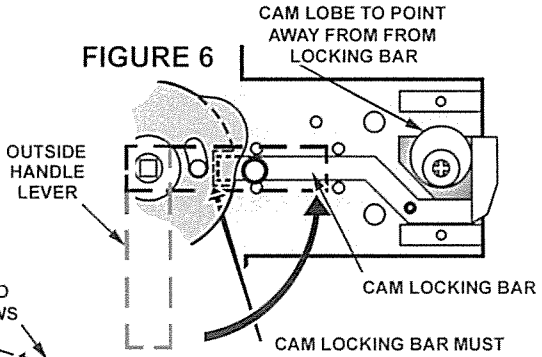

FIGURE 6

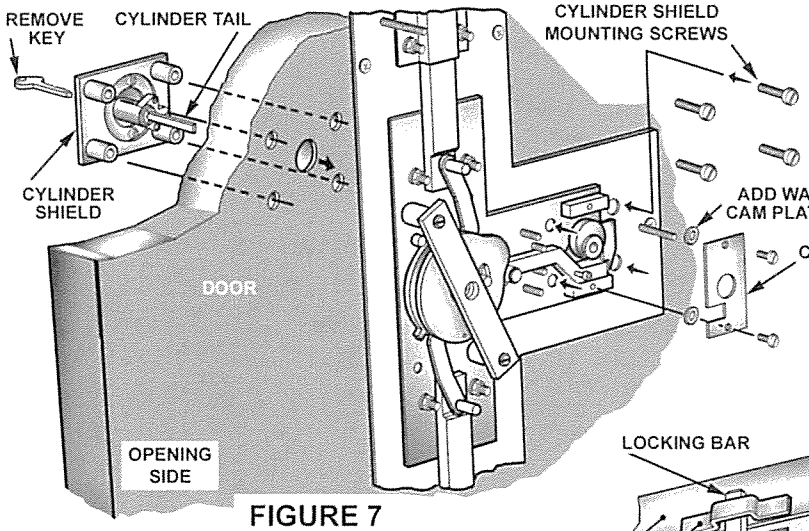

FIGURE 7

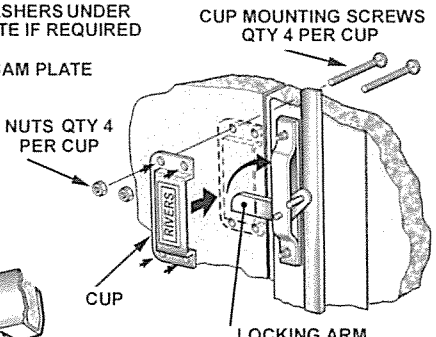

FIGURE 9

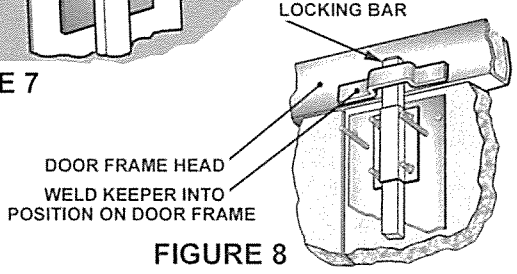

FIGURE 8