RIVERS LOCKING SYSTEMS (AUSTRALIA) PTY LTD
25 Circuit Court, Hendon SA 5014
Phone: 1300 857 276
Email: sales@riverslocking.com.au

RIVERS 420 FOUR POINT LOCK – OPEN OUT DOOR

1. Mark centreline of Lock across inside of door at desired height (nominally 1000mm from floor to centreline of Handle). (Fig. 1)
2. Remove cover from Lock Body.
3. Position Lock onto door at pre-determined height & such that the clearance between Lock Body & door jamb is equal on both sides. (Fig. 1) Fix Lock to door using only three self-tapping screws.
4. Mark four Cylinder Shield holes & Cylinder centre using the Lock Backing Plate as a template. (Fig. 3)
5. Remove Lock Body from door & drill four 10mm diameter holes through door, then counter bore each 15mm diameter x 25mm deep from the outside. Drill Lock Cylinder hole 32mm diameter. (Fig. 4 & 5)
6. Mount Lock Body to door using self-tapping screws provided.
7. Fit Cylinder Shield Assembly to door using screws provided. Fix through Lock body. (Fig. 7)
8. With the Locking Bars extended (i.e. locked position) & the key removed from the Cylinder, ensure that the Cam (that accepts the Cylinder Tail) is oriented so the two marks are lined up (one on the Cam, the other on the cover plate.) The door will need to be open to do this. This is critical for the Lock to function properly.
9. With door closed, activate the Locking Bars so that they are touching on the dor frame. Mark position of locking bars on frame. (Fig. 8)
10. Drill a 12mm diameter hole in frame at top & bottom of each Locking Bar position. (Fig. 9) Use a small cutting wheel to splice between top & bottom holes, either side. (Fig. 10) This will create a slot in the frame to accept Locking Bars. If frame is concrete filled, drill out masonry to a depth so the Locking Bars will not 'bottom out' when fully extended.
11. Clean edges of slots & ensure smooth action of Lock when locking/unlocking.
12. Position striker plates over the locking bars and against the frame, hold in position & fix in place with self-tapping screws supplied.
13. Fit outside Handle & Spindle to door using screws provided.
14. Ensure correct Lock operation. Inside Handle must disengage Locking Bars at all times (for escape), while the outside Handle should not operate unless the Cylinder has been unlocked with the key.
15. Replace Lock Body Cover and install inside Handle.
16. Ensure Lock operates smoothly & without resistance. Excessive force should not be required to activate lock. Inside Lever Handle must operate in a downward motion & allow escape at all times.

PLEASE NOTE: RIVERS RESERVES THE RIGHT TO CHANGE SPECIFICATIONS WITHOUT NOTICE

RIVERS LOCKS SHOULD ONLY BE MOUNTED ONTO SOLID CORE DOORS

410/420 FOUR POINT LOCK-OPEN OUT DOOR

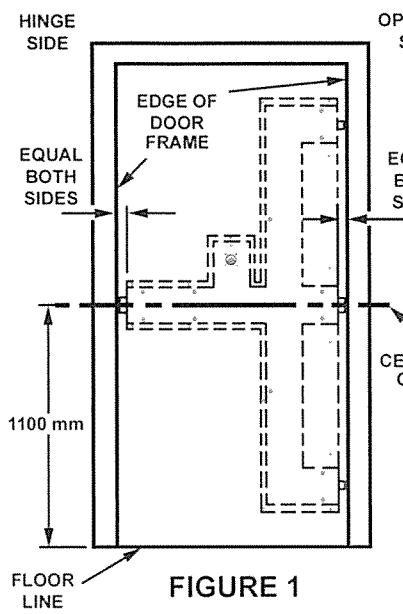

FIGURE 1

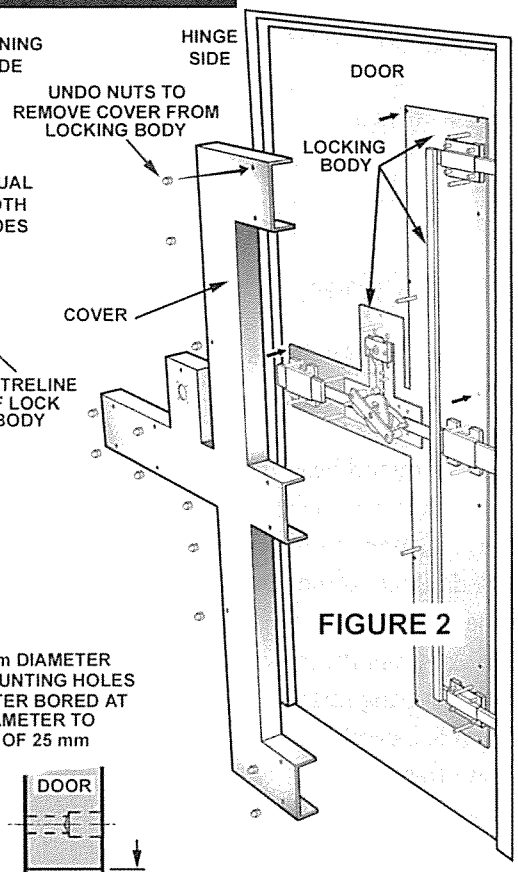

FIGURE 2

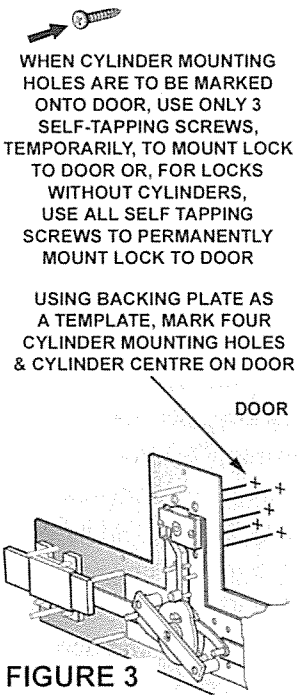

FIGURE 3

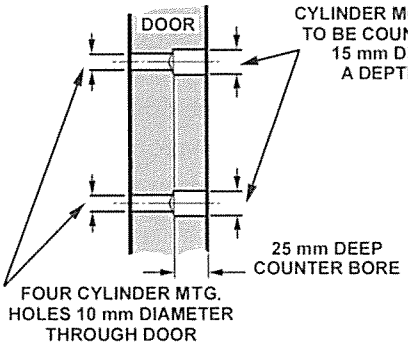

FIGURE 4
TYPICAL SECTION FOUR CYLINDER MOUNTING HOLES

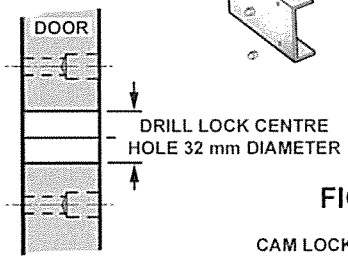

FIGURE 5

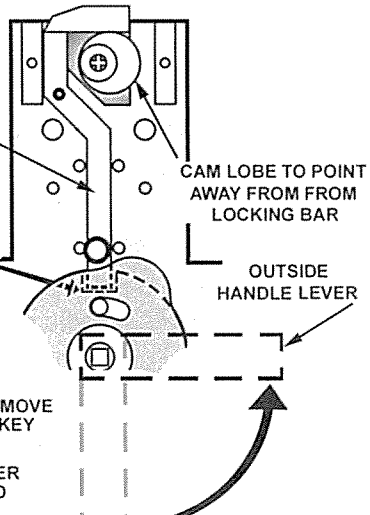

FIGURE 6

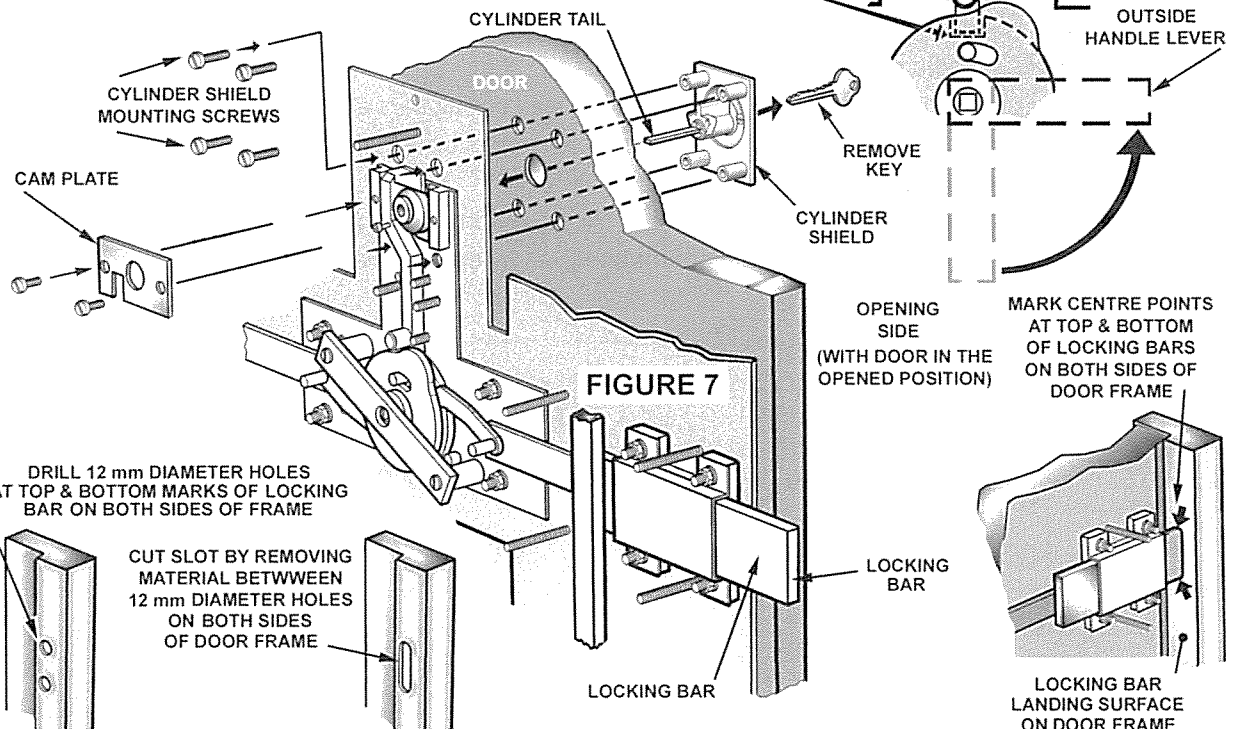

FIGURE 7

FIGURE 8

FIGURE 9

FIGURE 10