RIVERS LOCKING SYSTEMS (AUSTRALIA) PTY LTD
25 Circuit Court, Hendon SA 5014
Phone: 1300 857 276
Email: sales@riverslocking.com.au

RIVERS 410 FOUR POINT LOCK – OPEN OUT DOOR

1. Mark centreline of Lock across inside of door at desired height (nominally 1000mm from floor to centreline of Handle). (Fig. 1)
2. Position Lock onto door at pre-determined height & such that the clearance between Lock Body & door jamb is equal on both sides. (Fig. 1) Fix Lock to door using self-tapping screws.
3. Screw handle to the lock.
4. With door closed, activate the Locking Bars so that they are touching on the door frame. Mark position of locking bars on frame (Fig. 8)
5. Drill a 12mm diameter hole in frame at top and bottom of each Locking Bar position. (Fig. 9) Use a small cutting wheel to splice between top & bottom holes, either side. (Fig. 10) This will create a slot in the frame to accept Locking Bars. If frame is concrete filled, drill out masonry to a depth so that Locking Bars will not 'bottom out' when fully extended.
6. Clean edges of slots & ensure smooth action of Lock when locking/unlocking.
7. Position striker plates over the locking bars and against the frame, hold in position & fix in place with self-tapping screws supplied.
8. Ensure Lock operates smoothly & without resistance. Excessive force should not be required to activate Lock. Inside Lever Handle must operate in a downward motion & allow escape at all times.

PLEASE NOTE: RIVERS RESERVES THE RIGHT TO CHANGE SPECIFICATIONS WITHOUT NOTICE

RIVERS LOCKS SHOULD ONLY BE MOUNTED ONTO SOLID CORE DOORS

410/420 FOUR POINT LOCK-OPEN OUT DOOR

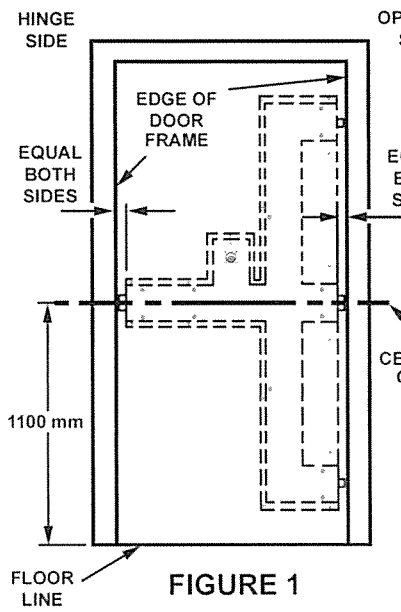

FIGURE 1

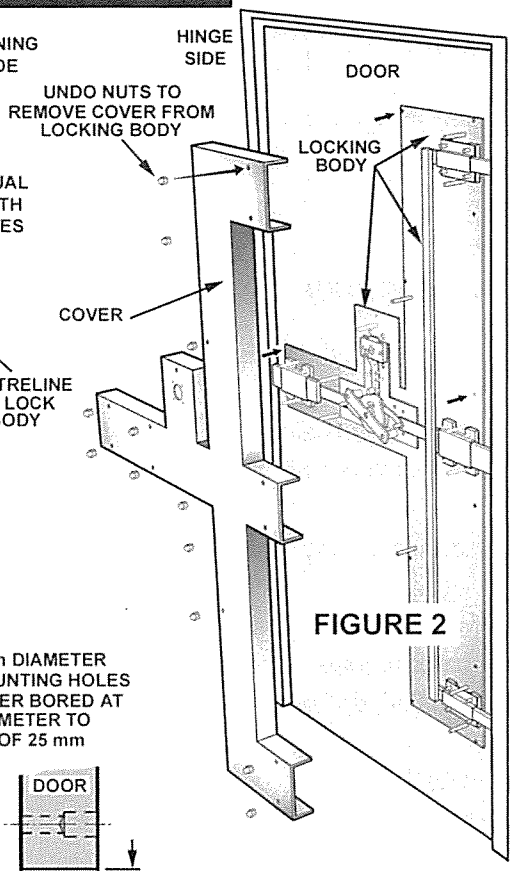

FIGURE 2

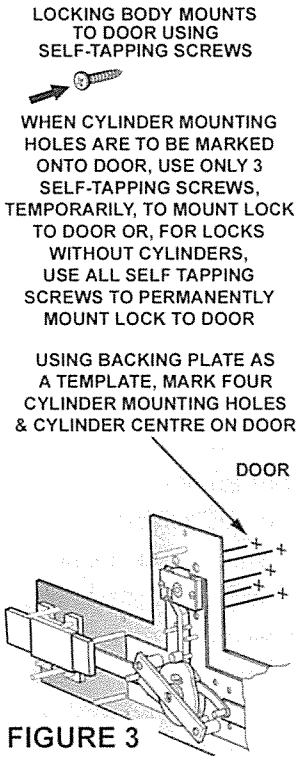

FIGURE 3

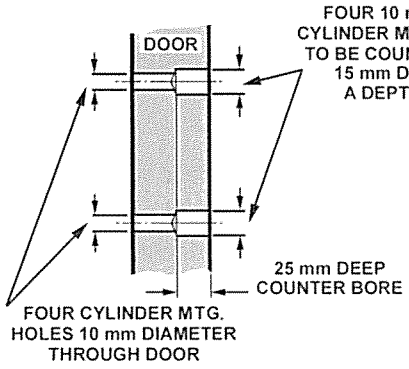

FIGURE 4
TYPICAL SECTION FOUR CYLINDER MOUNTING HOLES

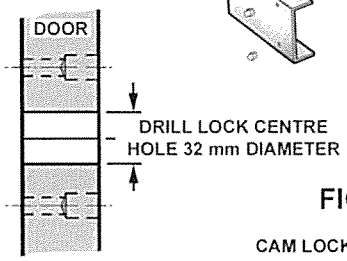

FIGURE 5

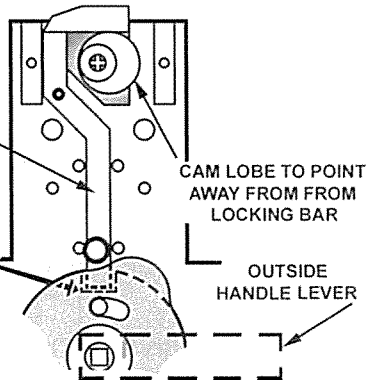

FIGURE 6

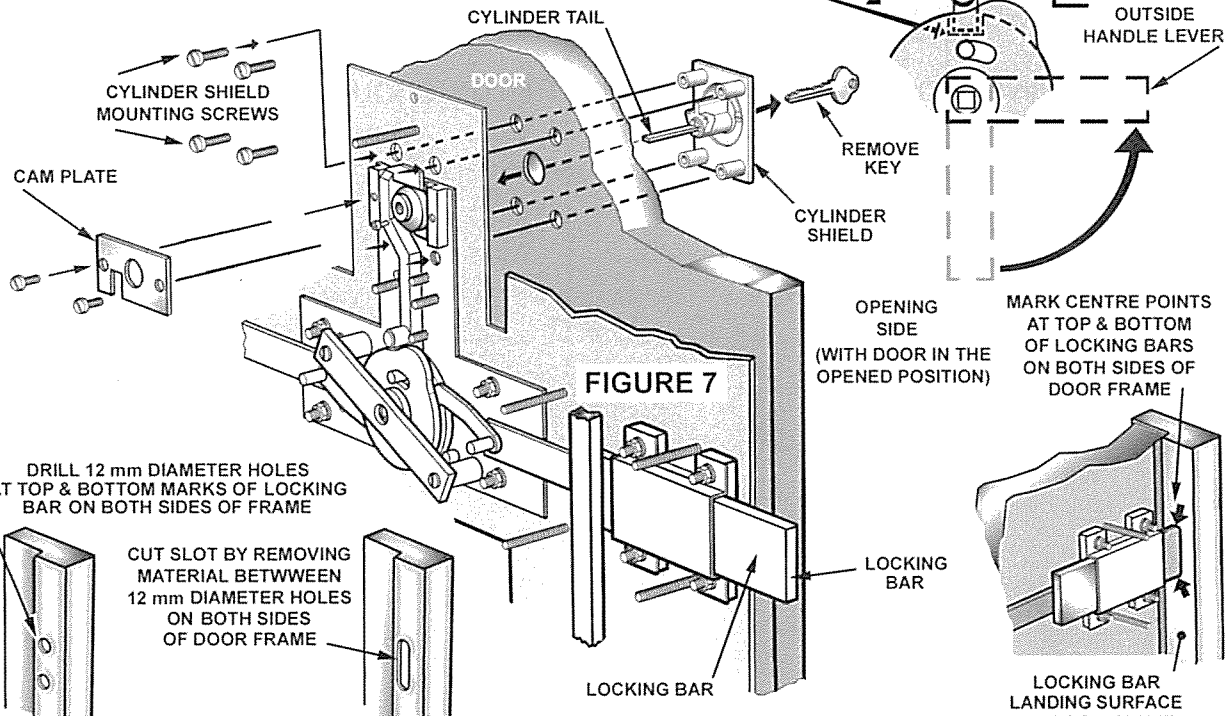

FIGURE 7

FIGURE 8

FIGURE 9

FIGURE 10