RIVERS LOCKING SYSTEMS (AUSTRALIA) PTY LTD
25 Circuit Court, Hendon SA 5014
Phone: 1300 857 276
Email: sales@riverslocking.com.au

RIVERS 410 FOUR POINT LOCK – OPEN IN DOOR

1. Mark centreline of Lock across inside of door at desired height (nominally 1000mm from floor to centreline of Handle). (Fig. 1)
2. Position Lock onto door at pre-determined height & such that the clearance between Lock Body & edge of door is approximately 5-10 mm at opening side & 20-25mm at hinge side. (Fig. 1 & 2) Fix Lock to door using all self-tapping screws.
3. Screw inside handle to the lock.
4. With door closed, activate the Locking Bars so that they are extended over the door frame. Position the keepers over the locking bars & against the frame, ensuring that there is equal clearance around the bars. Fix them in position with screws supplied. (Fig. 7)
5. Ensure Lock operates smoothly & without resistance. Excessive force should not be required to activate Lock. Inside Lever Handle must operate in a downward motion & allow escape at all times.

PLEASE NOTE: RIVERS RESERVES THE RIGHT TO CHANGE SPECIFICATIONS WITHOUT NOTICE

RIVERS LOCKS SHOULD ONLY BE MOUNTED ONTO SOLID CORE DOORS

410/420 FOUR POINT LOCK-OPEN IN DOOR

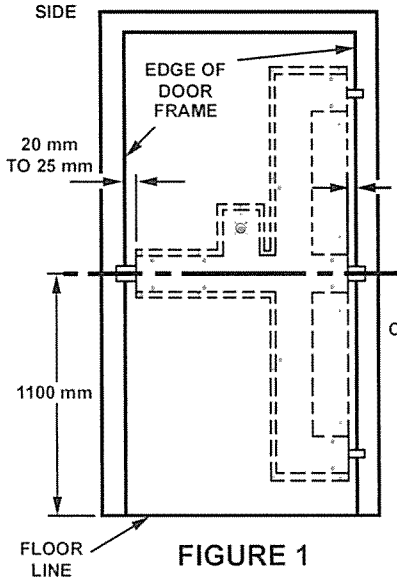

FIGURE 1

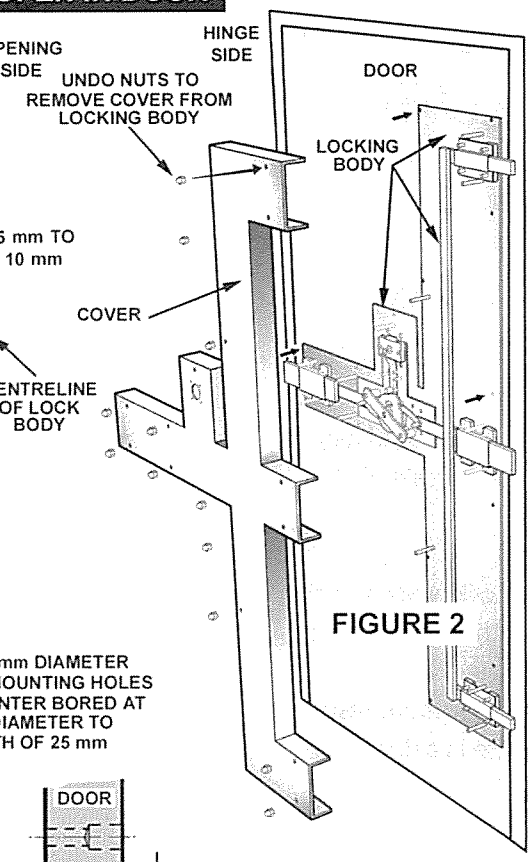

FIGURE 2

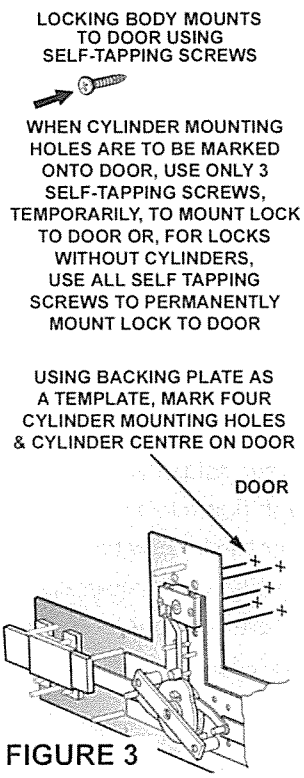

FIGURE 3

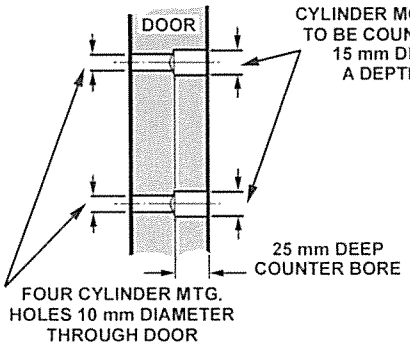

FIGURE 4

TYPICAL SECTION FOUR CYLINDER MOUNTING HOLES

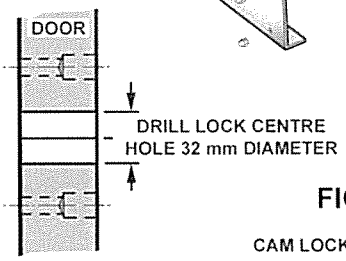

FIGURE 5

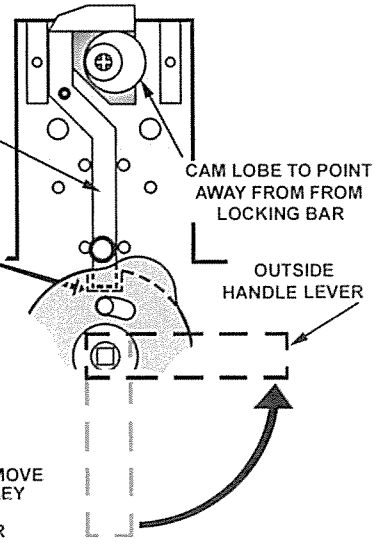

FIGURE 6

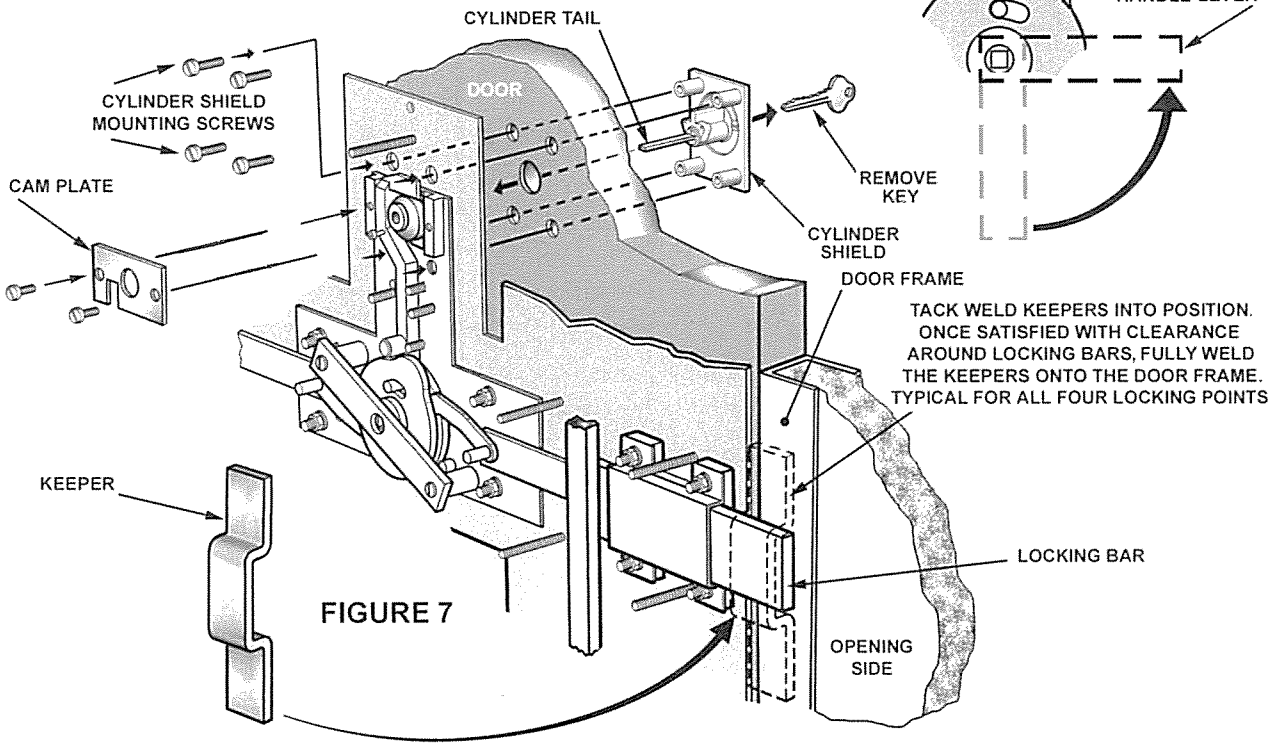

FIGURE 7